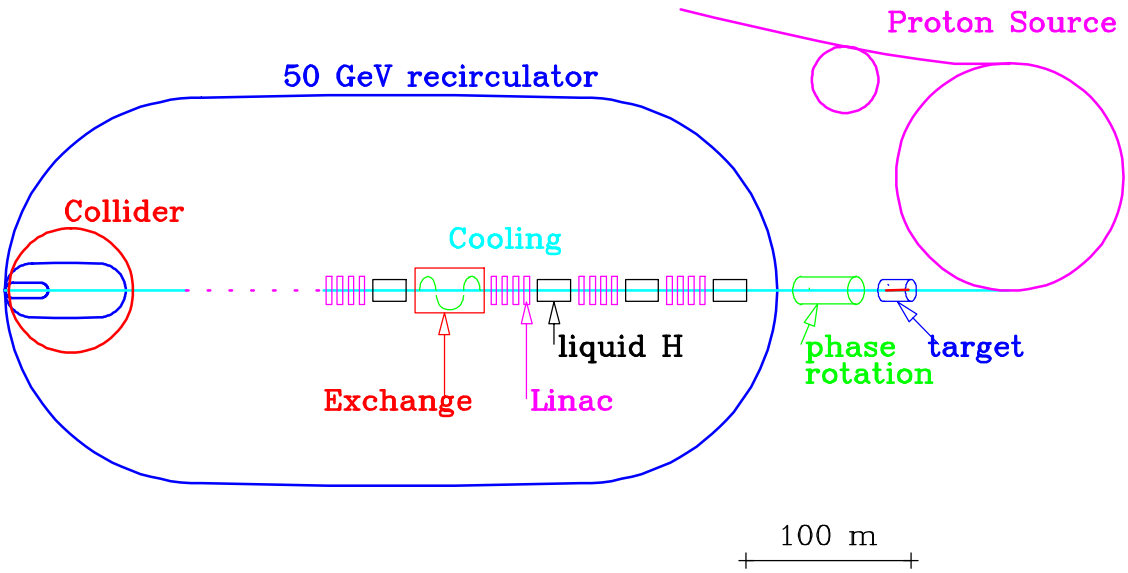
Proton Source
50 GeV recirculator
Collider
Cooling
liquid H
Exchange
Linac
phase
rotation
target
100 m